City of Greenville, Ohio
100 Public Square
Greenville, Ohio 45331
Planning & Zoning Department
Phone: 937-548-4930
cityofgreenville.org

RIGHT-OF-WAY & STREET OPENING & REPAIR PERMIT INFORMATION

(Includes any work within the public right-of-way.)

1. Complete Section 1 of the permit form and the location sketch. Dimensions of the trench/work area in the right-of-way are necessary and to be supplied by the Applicant. Return this information to the City Planning & Zoning Office. The staff reviews and approves the application.

2. Bond amount will be figured based on the work area in the right-of-way. The bond amount is figured using the fee schedule on the back of this form. The bond must be in place on the date of work and remain in place for one full year. (Bond date must match work date.)

3. The bond and permit must be submitted on the form provided. The bonding company is urged to e-mail (jcross@cityofgreenville.org) the bond before the client delivers it to the City, to speed up the approval process. The original bond must still be submitted with the application.

4. After approval of the bond, the Auditor will accept payment of the $50 permit fee and issue the permit.

5. Notify the Planning & Zoning Office (937-548-4930) of time work is planned to begin and when you will need any inspections. 24 Hour notice is needed.

City of Greenville, Ohio
100 Public Square
Greenville, Ohio 45331
Engineering Department
Phone: 937-548-4930
jcross@cityofgreenville.org

RIGHT-OF-WAY & STREET OPENING & REPAIR PERMIT FEE SCHEDULE

Permit Fee:	$50.00/opening

BOND AMOUNT REQUIRED FOR RIGHT-OF-WAY & STREET OPENING & REPAIR PERMITS

Utility Bond Amount for 20 openings:	$40,000.00
Blanket Bond Amount for 10 openings:	$20,000.00
Individual Bond Base Amount for the first 10':	$1,000.00
+PLUS+	
Sidewalk:	$55.00/FT
Straight Curb/Curb & Gutter:	$60.00/FT
Residential Drive Approach:	$90.00/SY
Commercial Drive Approach:	$100/SY
Trench/Pavement Repair:	$60.00/SY
Trench/Pavement Repair (full depth):	$85.00/SY

Effective July 16, 2010

BOND

BOND NO._____

Know all Men by These Presents, That we _____ as Principal and _____, as Sureties, are held firmly bound unto the City of Greenville, State of Ohio, in the penal sum of _____ _____ Dollars to be paid to the City of Greenville for the payment whereof well and truly to be made jointly and severally bind ourselves, our heirs, executors and administrators and assigns firmly by these presents.

Signed by us this _____ day of _____, _____.

The Conditions of this Bond are such that whereas the above-bounded has been granted a **PERMIT** by the City Auditor of the City of Greenville, State of Ohio, to extend from _____ to _____ for the purpose of :

Street Opening(s):_____

Now, therefore, if the said _____ will faithfully comply with the rules and regulations set forth by the City Auditor and will faithfully comply with all respects of Chapter 1020 of the Ordinances of the City of Greenville, Ohio, then this obligation shall be void, otherwise, to remain in full force and virtue of law. This **BOND** shall remain in full force and effect until _____, _____.

Signed this _____ day of _____, _____.

_____
Principal (Please Type or Print)

By:_____

Its:_____

_____

By:_____
Attorney-in-Fact

Countersigned:

_____
Ohio Resident Agent

RIGHT-OF-WAY AND
STREET OPENING AND REPAIR PERMIT

City of Greenville, Ohio
Chapter 1020, Codified Ordinance

_____-STR-_____

PART 1 APPLICATION (To be filled in by the applicant.)

Name & Address of Owner:_____

Name & Address of Contractor:_____

Contact Phone:_____ Date of Opening:_____

Address of Excavation:_____**(SKETCH)**

Purpose of Opening:_____

Signature of Applicant:_____ Date:_____

PART 2 APPROVAL (To be filled in by City personnel.)

Total Work Area In Public Right-Of-Way: _____ Guarantee $_____

☐ Individual ☐ Blanket ☐ Utility Guarantee Bond / LOC: Bond Date _____

_____ _____
City Planning Representative Date City Auditor Date

Non-Refundable Permit Fee: $50.00 Receipt No._____ Date:_____

PART 3 INSPECTION NOTES

_____

_____

_____

PART 4 REFUND (To be filled in by Street Superintendent before one year guarantee expires.)

Amount of Guarantee Bond Deposit: (See Part 2) $ _____

Deduct Amount of Repair Cost by the City: $ _____

Amount to be ☐ Refunded or ☐ Collected: $ _____

Certified by the Street Superintendent: _____ Date:_____

Notes:
(1) See Standard Drawing for trench backfill and pavement repair.
(2) Call Before You Dig at phone number 811.
(3) Schedule inspections by calling (937)548-4930, 8:00 – 4:30 Monday – Thursday; 8:00 – 1:00 Friday.

cc: City Auditor * Street Superintendent * Inspector

RIGHT-OF-WAY AND STREET OPENING AND REPAIR PERMIT LOCATION SKETCH

_____
PERMIT NUMBER

Address: _____

Applicant's Signature _____

* Show location of proposed work which should include dimensions (liner feet of sidewalk, and curb and gutter; square yards of drive approaches and trench work)

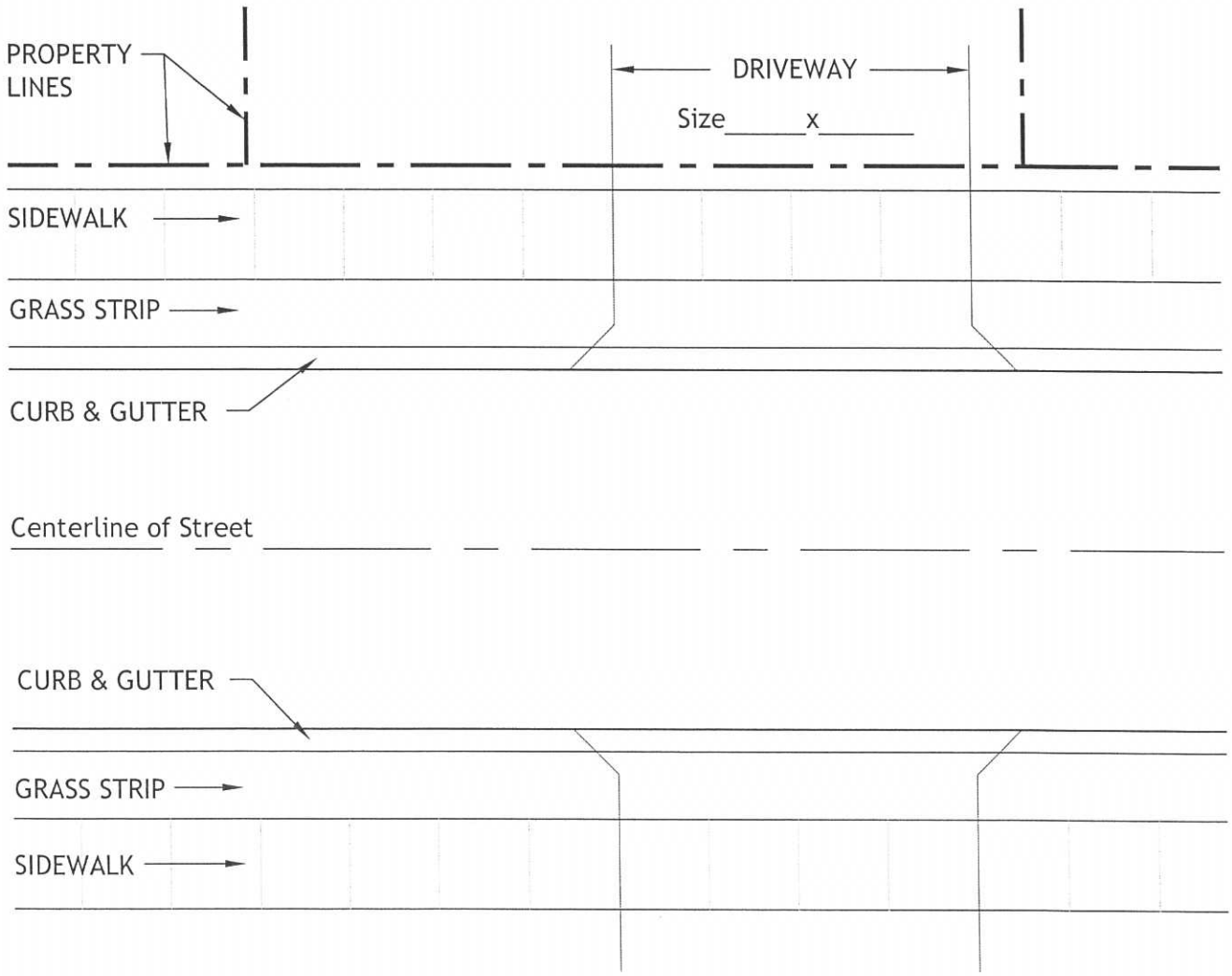

Driveway / Apron	L=_____W=_____	Sq. Yds.=_____ (length x width /9)
CURB & GUTTER	L.F. =_____	
Sidewalk	L.F. =_____	
Total Linear Feet	=_____	
Total Square Yards	=_____	

Is there an existing curb?_____ Is there a sidewalk?_____

NOTE: This sketch is to be used for estimate of street repair cost or guarantee deposit.

CITY OF GREENVILLE

Dept. of Planning & Zoning
100 Public Square
Greenville, OH 45331
Phone: (937) 548-4930, Web: www.cityofgreenville.org

Date: September 5, 2013
To: Contractors, Developers & Property Owners
Re: Inspection and Placement of Curbs, Drive Aprons & Sidewalk

At any point, within the construction process, you infringe upon the public right-of-way, it is absolutely necessary to obtain a permit and perform all work according to the standards set forth by the City of Greenville under the direction of the State of Ohio. A bond or approved letter of credit will be required as part of the permit. All work mentioned must be inspected prior to the labor being performed by either himself or a representative of the Planning & Zoning Director. All permitting, bonding, inspections, construction, installation, excavation, repair, alteration, modification or removal must comply with Chapters 1020, 1024, 1026 and 1032 of the Codified Ordinances of the City of Greenville.

The City of Greenville has an adopted set of specifications that have been applicable since May of 1998. During the design and estimating process it would be advantageous to review the standard drawings, included herein, and should any questions arise a meeting with a representative of this office is recommended before proceeding. Our staff is available Monday thru Thursday from 8:00 am to 4:30 pm, and on Friday from 8:00 am to 1:00 pm.

The attached standard drawings represent the regulations enforced by the City of Greenville. These regulations were prepared in accordance with the standards set by the Ohio Department of Transportation, and in areas of disparity the more stringent regulation will apply.

Of particular reference, all concrete used on city infrastructure is to be poured with a strength rating of 4,000 psi with a 3-4" slump. Sidewalks are to be poured at a 4" minimum depth with a compacted 4" aggregate stone base of Type #57, #304 or #411 without exception. The City also requires that sidewalks persist through all drive approaches where applicable, in which their size and depth will be based upon the regulations applying to the drive approach. Residential drive approaches are to be 6" thick, while commercial drive approaches are to be 8" thick. Curbs are to be poured at a 13" depth for curb & gutter combinations, while straight curbs are to be poured at 18" depth. Truncated domes shall be installed at all pedestrian crossings regardless of previous existence, and shall be constructed according to the regulations accepted by the Ohio Department of Transportation and enforced by the City of Greenville.

Whoever fails to obtain the proper permit prior to beginning work regulated therein shall be required to obtain a permit and is subject to a penalty as stated in 1020.99 of the Codified Ordinances. The permit fee under such circumstances shall be two times the amount of the usual and customary permit fee per Ordinance No. 10-42.

In addition, work started within the public right-of-way without the appropriate permit, will warrant a "Stop Work Order" per Chapter 1034 of the Codified Ordinances of the City of Greenville. Violators of the Stop Work Order shall be subject to a penalty as stated in 1034.99 of the Codified Ordinances.

If City infrastructure is installed incorrectly and/or without an inspection the contractor or owner of the property will be asked to remove and replace it correctly at their expense.

Sincerely,

Chad D. Henry
Planning & Zoning Director

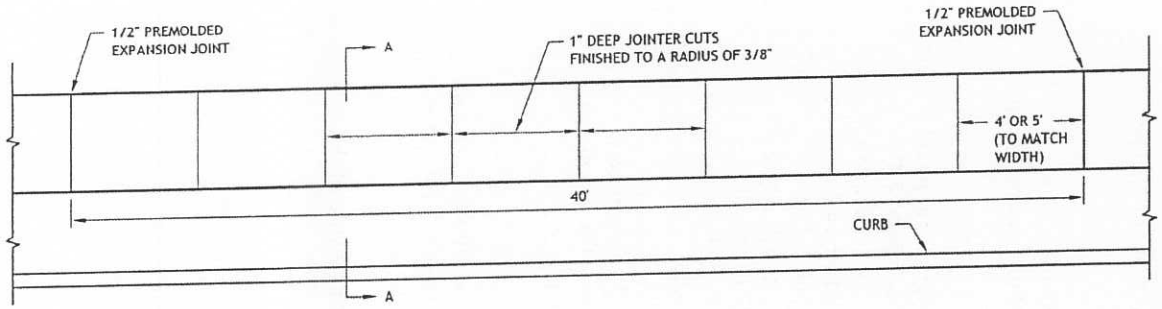

PLAN VIEW

SCALE: N.T.S.

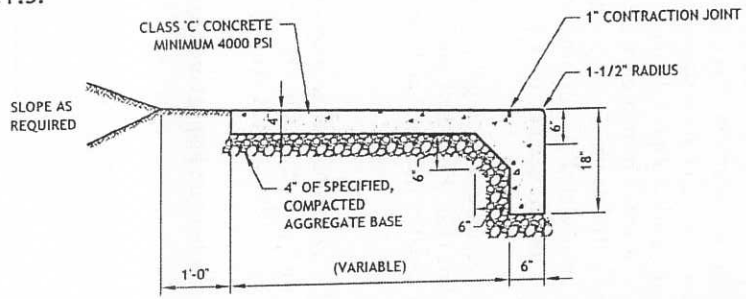

CONCRETE COMBINATION CURB & GUTTER

SCALE: N.T.S.

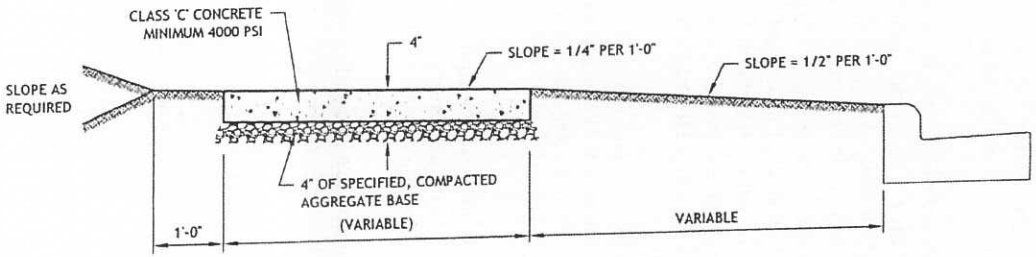

SECTION A-A

SCALE: N.T.S.

NOTES

ALL FORMS OF NEW SIDEWALK SHALL MEET THE REQUIREMENTS SET FORTH IN ITEM #499, 'CONCRETE - GENERAL' and ITEM #511, 'CONCRETE FOR STRUCTURES'

MAXIMUM JOINT SPACING ALONG WALK MAY VARY TO MATCH OVERALL WIDTH

PREMOLDED EXPANSION JOINTS SHALL CONFORM TO ODOT ITEM #705.03, 'PREFORMED FILLERS'

4" OF ACCEPTABLE AGGREGATE BASE (ANGULAR STONE TYPES #57, 304 & 411) SHALL BE PLACED UNDER DRIVE APPROACH

PROVIDE BROOM FINISH TO ALL EXPOSED SURFACES.

PROVIDE A MINIMUM OF 2" EDGING AROUND ALL EXPOSED SURFACES.

IN ALL INSTANCES WHERE EXISTING IRREGULAR CONDITIONS PRESENT A HARDSHIP (e.g. GRADE, WIDTH, ETC.) THE DETERMINING SOLUTION MUST BE MADE BY THE CITY ENGINEER OR A REPRESENTATIVE THEREOF.

CITY OF GREENVILLE OHIO	Sidewalk Details
	Design #
	10-18-2010
	Rev Date

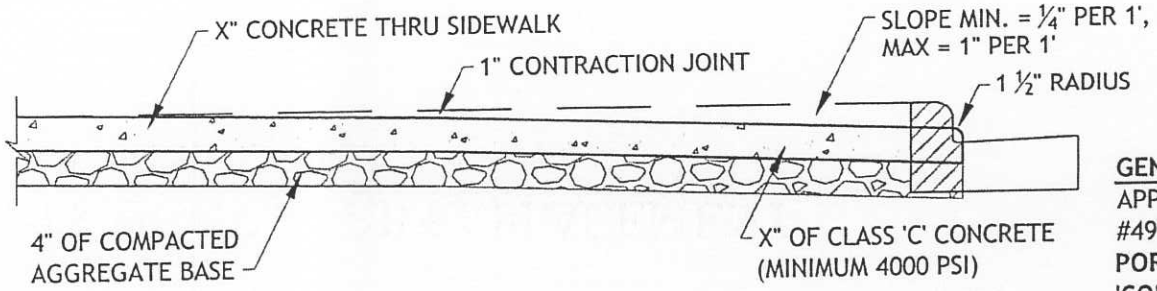

DRIVE WIDTHS	
RESIDENTIAL	COMMERCIAL
12' - 24'	16' - 35'

DRIVE APPROACH- SECTION VIEW

SCALE: N.T.S.

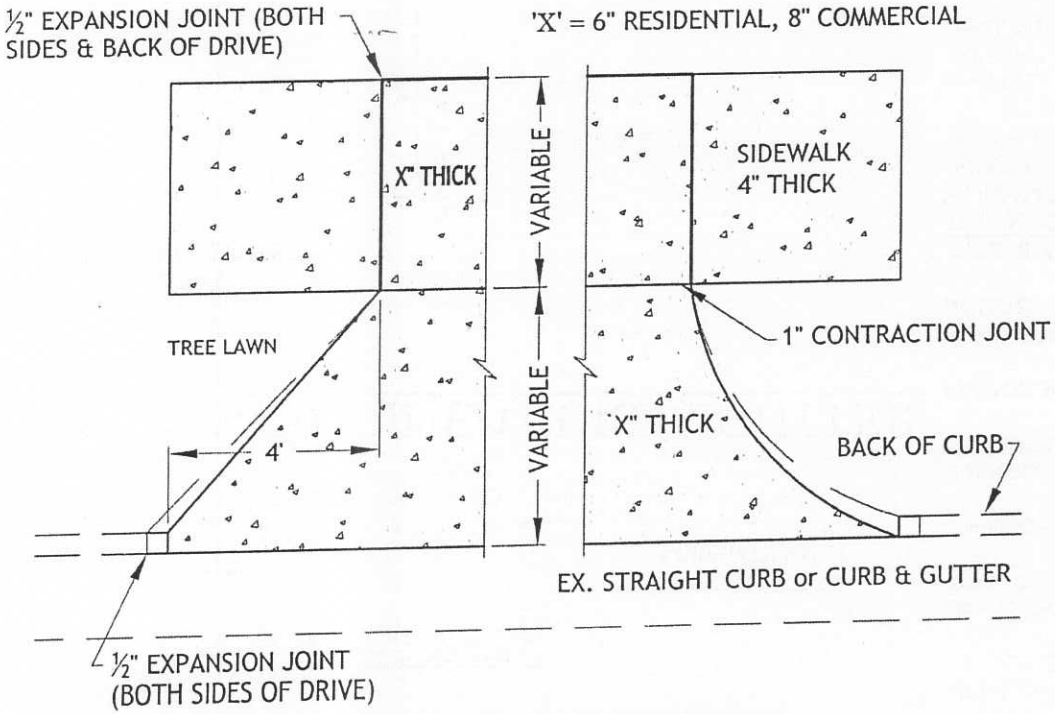

DRIVE APPROACH- PLAN VIEW

SCALE: N.T.S.

GENERAL NOTES:

APPROACH SHALL MEET THE REQUIREMENTS SET FORTH IN ITEM #499, **'CONCRETE - GENERAL'**, ITEM #452, **'NON-REINFORCED PORTLAND CEMENT CONCRETE PAVEMENT'** and ITEM #511, **'CONCRETE FOR STRUCTURES'**.

MAXIMUM JOINT SPACING SHALL BE 12' LONGITUDINALLY AND TRANSVERSELY.

DRIVE APPROACHES SHALL BE KEYED AT ALL CONSTRUCTION JOINTS.

EXPANSION MATERIAL SHALL BE ½" PREMOLDED AS PER ODOT 705.03.

4" OF ACCEPTABLE AGGREGATE BASE SHALL BE PLACED UNDER THE DRIVE APPROACH. ACCEPTABLE BASE CONSISTS OF ANGULAR TYPE #57, #411, AND #304 STONE. NATURAL STONE IS NOT PERMITTED.

PROVIDE BROOM FINISH AND EDGING TO ALL EXPOSED SURFACES.

THE DRIVE APPROACH FLARES SHOWN ABOVE SHALL BE USED AND ANY VARIANCE FROM SUCH SHALL FIRST BE APPROVED BY THE CITY ENGINEER OR A REPRESENTATIVE THEREOF.

DRIVE APPROACH MUST BE A MINIMUM OF 3' FROM PROPERTY LINE.

THE RADIUS LENGTH SHALL BE THE SAME AS THE TREE LAWN WIDTH OR ANY VARIANCE FROM SUCH SHALL FIRST BE APPROVED BY THE CITY ENGINEER OR A REPRESENTATIVE THEREOF.

CITY OF GREENVILLE THE TREATY CITY OHIO	Drive Approach Detail
	Design #
	10-18-2010
	Rev Date

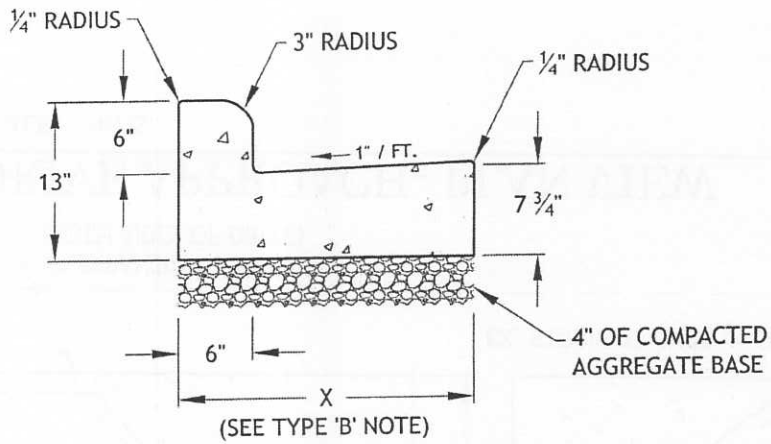

TYPE 'B' COMBINED CURB & GUTTER

SCALE: N.T.S.

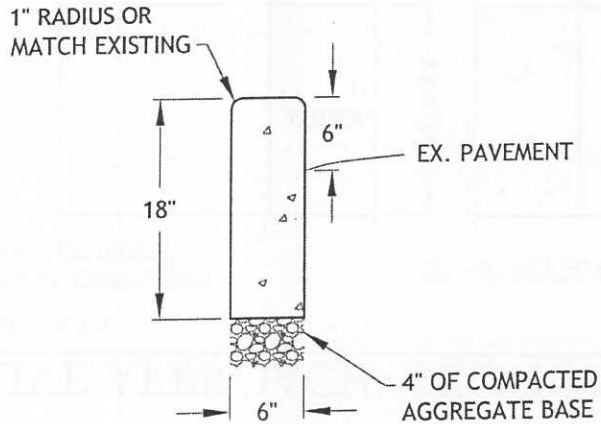

STRAIGHT CURB REPLACEMENT

SCALE: N.T.S.

GENERAL NOTES:

ALL CONCRETE WORK SHALL MEET THE REQUIREMENTS SET FORTH IN ODOT'S CONSTRUCTION & MATERIAL SPECIFICATIONS ITEM #609, **'CURBING, CONCRETE MEDIANS, AND TRAFFIC ISLANDS'**.

CONCRETE SHALL CONFORM TO ODOT ITEM #499, **'CONCRETE - GENERAL'** and ITEM #511, **'CONCRETE FOR STRUCTURES'**.

WHEN USED WITH ASPHALT PAVEMENTS, TYPE 'B' CURBING SHALL HAVE CONTRACTION JOINTS EVERY 10' AND 1" EXPANSION JOINTS AT A MAXIMUM OF 100'.

SIX INCHES OF #304 AGGREGATE SHALL BE PLACED UNDER TYPE 'B' CURBING WHEN IN A FILL AREA OR AS DIRECTED BY THE CITY ENGINEER.

CURBING SHALL BE BACKFILLED IMMEDIATELY AFTER FORMS ARE REMOVED.

A MINIMUM SIZE DRAIN TILE OF 2" SHALL BE INSTALLED THRU THE CURB FOR ALL DOWNSPOUT DRAINS.

PROVIDE BROOM FINISH AND EDGING TO ALL EXPOSED SURFACES.

#4 REINFORCING RODS SHALL BE USED WHERE CURBING WILL BE IN A FILL AREA OF 12" OR AS DIRECTED BY THE CITY ENGINEER.

TYPE 'B' CURB & GUTTER:

THE VALUE INDICATED AS 'X' WILL VARY DEPENDING ON THE CLASSIFICATION OF THE STREET AS INDICATED IN THE 2004 CITY OF GREENVILLE COMPREHENSIVE PLAN. "LOCAL ROAD" & "MINOR COLLECTOR" CLASS STREETS WILL BE 24"; "MAJOR COLLECTOR", "MINOR ARTERIAL", "MAJOR ARTERIAL" & "EXPRESSWAY" CLASS STREETS WILL BE 30".

½" PREMOLDED EXPANSION JOINTS SHALL BE CONSTRUCTED ON EACH SIDE OF DRIVE APPROACH SECTIONS AND AT P.C. POINTS AT INTERSECTIONS, BUT THE MAXIMUM SPACING SHALL NOT EXCEED 100'.

STRAIGHT CURB REPLACEMENT:

SEE PREMOLDED EXPANSION SPECIFICATION AS INDICATED UNDER "TYPE 'B' CURB & GUTTER.

SIX INCH CURB HEIGHT ABOVE PAVEMENT MAY VARY DEPENDING ON ADJACENT CURBING. ACTUAL HEIGHT SHALL BE APPROVED BY THE CITY ENGINEER OR A REPRESENTATIVE THEREOF.

CITY OF GREENVILLE OHIO	Concrete Curb Details
	Design #
	10-18-2010
	Rev Date

NOTES

DRAINAGE:
CONTRACTOR IS TO ENSURE THE BASE OF EACH CONSTRUCTED CURB RAMP ALLOWS FOR PROPER DRAINAGE, w/OUT EXCEEDING ALLOWABLE CROSS SLOPE OR RAMP SLOPES.

JOINTS:
PROVIDE EXPANSION JOINTS IN THE CURB RAMP AS EXTENSIONS OF WALK JOINTS & CONSISTENT WITH ITEM #608.03 REQUIREMENTS FOR A NEW CONCRETE WALK. PROVIDE A ½" ITEM #705.03 EXPANSION JOINT FILLER AROUND THE EDGE OF RAMPS BUILT IN EXISTING CONCRETE WALKS.

PLACEMENT:
TRUNCATED DOMES ARE TO BE INSTALLED AT ANY LOCATION WHERE PEDESTRIANS MIGHT CROSS PATHS w/ VEHICULAR TRAFFIC LANES, SUCH AS THE BASE OF CURB RAMPS OR AT BLENDED CURBS.

DIMENSIONS OF THE TRUNCATED DOMES ARE 24" FROM BACK OF CURB BY RAMP WIDTH.

ALIGNMENT:
TRUNCATED DOMES SHOULD BE ALIGNED w/ THE PRIMARY DIRECTION OF PEDESTRIAN TRAVEL AS INDICATED IN **ODOT STANDARD ROADWAY CONSTRUCTION DRAWING BP-7.1 .** NORMALLY DOMES SHOULD BE FLUSH WITH THE BACK OF THE CURB, BUT SKEWED CONDITIONS CAN BE UP TO 6" TO 8" BEHIND THE CURB.

VISUAL CONTRAST:
COLOR OF THE TRUNCATED DOMES SHOULD CONTRAST WITH SURROUNDING CONCRETE WALK & RAMP. USE OF A RED BLEND IS RECOMMENDED FOR CONCRETE CURB RAMPS. BLACK IS NOT AN ACCEPTIBLE COLOR.

PRODUCTS:
APPROVED PRODUCTS MAY BE FOUND ON THE OFFICE OF ROADWAY ENGINEERING SERVICE'S TRUNCATED DOMES APPROVED LIST. INSTALL PRODUCTS AS PER MANUFACTURER'S PRINTED INSTRUCTIONS.

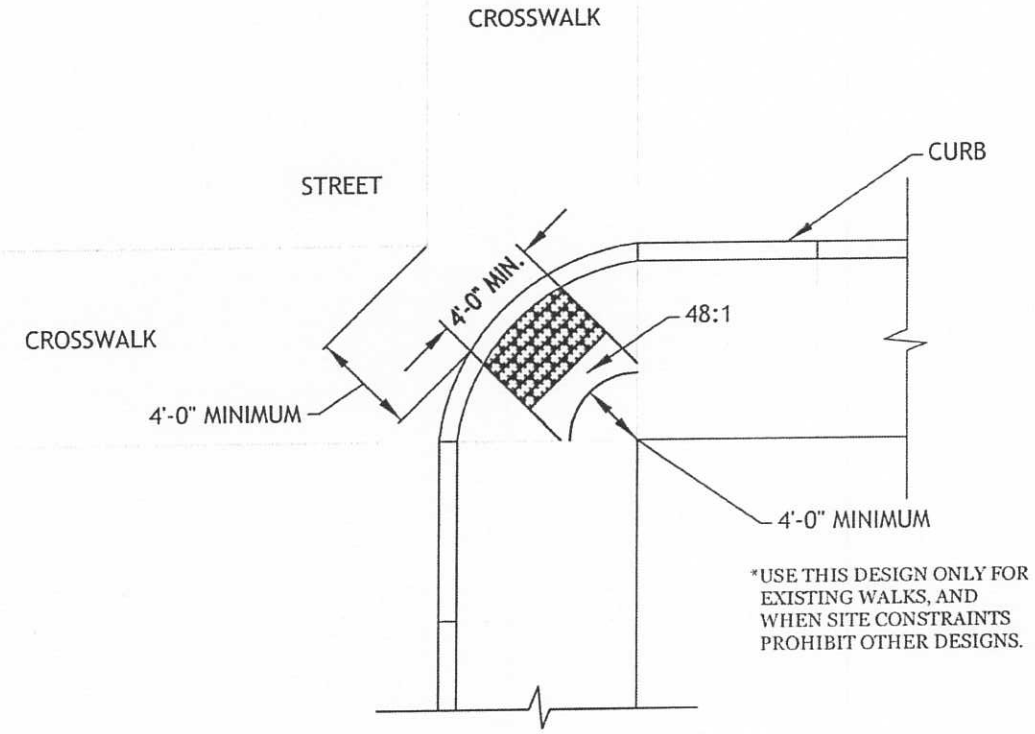

*USE THIS DESIGN ONLY FOR EXISTING WALKS, AND WHEN SITE CONSTRAINTS PROHIBIT OTHER DESIGNS.

ALL CURB RAMPS CONSTRUCTED WITHIN THE CITY OF GREENVILLE MUST CONFORM TO CURRENT OHIO DEPARTMENT OF TRANSPORTATION STANDARD AS FOUND IN DRAWING BP-7.1, AND USAGE MUST BE VERIFIED BY THE CITY ENGINEER OR REPRESENTATIVE THEREOF.

	New Curb Ramps
	Design #
	10-18-2010
	Rev Date